Planetary Gearhead GP 16 C ∅16 mm, 0.2–0.6 Nm

Ceramic Version

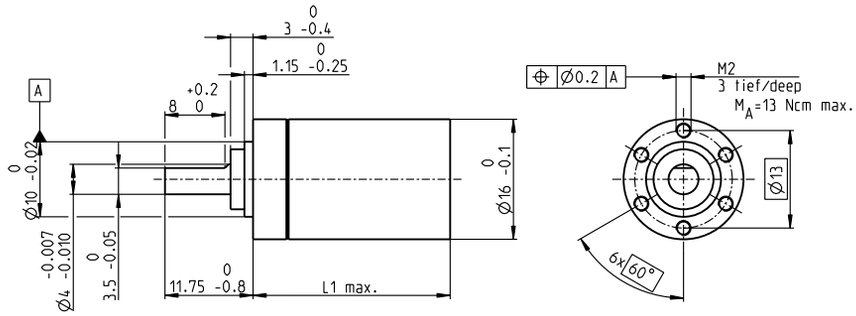

M 1:1

Technical Data					
Planetary Gearhead					straight teeth
Output shaft					stainless steel, hardened
Bearing at output					preloaded ball bearings
Radial play, 6 mm from flange					max. 0.08 mm
Axial play at axial load	< 4 N				0 mm
	> 4 N				max. 0.05 mm
Max. axial load (dynamic)					12 N
Max. force for press fits					100 N
Direction of rotation, drive to output					=
Max. continuous input speed					12 000 rpm
Recommended temperature range					-40...+100°C
Number of stages	1	2	3	4	5
Max. radial load, 6 mm from flange	20 N	40 N	60 N	80 N	80 N

Stock program
Standard program
Special program (on request)

		Part Numbers							
		416328	407883	416391	401954	328699	416028	416188	414453
Gearhead Data									
1 Reduction		4.4:1	19:1	84:1	157:1	370:1	690:1	1621:1	3027:1
2 Absolute reduction		57/13	3249/169	185193/2197	19683/125	10556001/28561	1121931/1625	601692057/371293	63950067/21125
3 Max. motor shaft diameter	mm	2	2	2	1.5	2	1.5	2	2
Part Numbers		416500	416499	416385		416115	415807	415893	415476
1 Reduction		5.4:1	24:1	104:1		455:1	850:1	1996:1	3728:1
2 Absolute reduction		27/5	1539/65	87723/845		5000211/10985	531441/625	28501027/142805	30292137/8125
3 Max. motor shaft diameter	mm	1.5	1.5	2		2	1.5	2	1.5
Part Numbers			416428	402672		416097		415786	409316
1 Reduction			29:1	128:1		561:1		2458:1	4592:1
2 Absolute reduction			729/25	41553/325		2368521/4225		135005697/54925	14348907/3125
3 Max. motor shaft diameter	mm		1.5	1.5		2		2	1.5
4 Number of stages		1	2	3	3	4	4	5	5
5 Max. continuous torque	Nm	0.2	0.3	0.4	0.4	0.5	0.5	0.6	0.6
6 Max. intermittent torque at gear output	Nm	0.3	0.45	0.6	0.6	0.75	0.75	0.9	0.9
7 Max. efficiency	%	90	81	73	73	65	65	59	59
8 Weight	g	22	25	29	29	33	33	37	37
9 Average backlash no load	°	1.4	1.6	2	2	2.4	2.4	3	3
10 Mass inertia	gcm^2	0.07	0.05	0.05	0.04	0.05	0.04	0.05	0.05
11 Gearhead length L1	mm	18.1	23.2	26.8	26.8	30.4	30.4	33.9	33.9

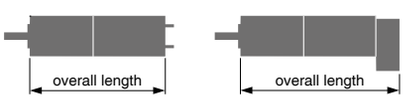

maxon Modular System

+ Motor	Page	+ Sensor/Brake	Page	Overall length [mm] = Motor length + gearhead length + (sensor/brake) + assembly parts							
RE 16, 2 W	139			40.5	45.6	49.2	49.2	52.8	52.8	56.3	56.3
RE 16, 2 W	139	MR	475/476	46.2	51.3	54.9	54.9	58.5	58.5	62.0	62.0
RE 16, 3.2 W	140/141			58.6	63.7	67.3	67.3	70.9	70.9	74.4	74.4
RE 16, 3.2 W	141	MR	475/476	63.6	68.7	72.3	72.3	75.9	75.9	79.4	79.4
RE 16, 4.5 W	142/143			61.6	66.7	70.3	70.3	73.9	73.9	77.4	77.4
RE 16, 4.5 W	143	MR	475/476	66.6	71.7	75.3	75.3	78.9	78.9	82.4	82.4
A-max 16	159-162			43.6	48.7	52.3	52.3	55.9	55.9	59.4	59.4
A-max 16	160/162	MR	475/476	48.6	53.7	57.3	57.3	60.9	60.9	64.4	64.4
EC-max 16, 5 W	245			42.1	47.3	50.9	50.9	54.4	54.4	57.9	57.9
EC-max 16, 5 W	245	MR	477	49.4	54.6	58.2	58.2	61.8	61.8	65.2	65.2
EC-max 16, 8 W	247			54.1	59.3	62.9	62.9	66.4	66.4	69.9	69.9
EC-max 16, 8 W	247	MR	477	61.4	66.6	70.2	70.2	73.7	73.7	77.2	77.2