EC 9.2 flat ∅10 mm, brushless, 0.5 watt

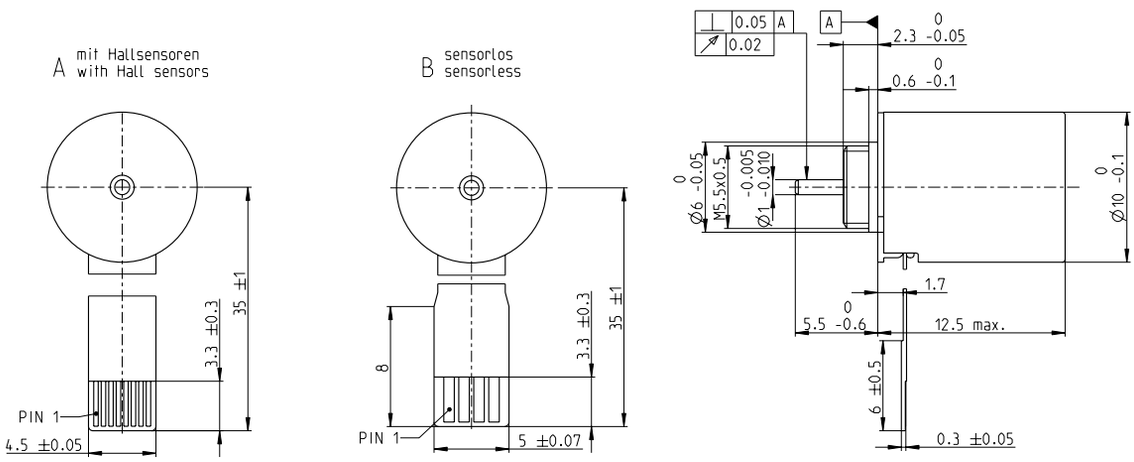

M 2:1

Stock program
Standard program
Special program (on request)

Part Numbers

A with Hall sensors	624161	624162	624163
B sensorless	371119	371120	371122

Motor Data (provisional)

	Values at nominal voltage			
1	Nominal voltage	V	3	4.5	6
2	No load speed	rpm	13900	14000	15600
3	No load current	mA	51.5	34.7	30.9
4	Nominal speed	rpm	4120	3780	5240
5	Nominal torque	mNm	0.733	0.701	0.684
6	Nominal current	A	0.418	0.27	0.222
7	Stall torque[1]	mNm	1.09	1.01	1.1
8	Stall current	A	0.584	0.364	0.332
9	Max. efficiency	%	52	51	50
	Characteristics				
10	Terminal resistance phase to phase	Ω	5.14	12.4	18.1
11	Terminal inductance phase to phase	mH	0.127	0.281	0.4
12	Torque constant	mNm/A	1.86	2.77	3.3
13	Speed constant	rpm/V	5120	3450	2890
14	Speed/torque gradient	rpm/mNm	14100	15400	15800
15	Mechanical time constant	ms	35.1	38.2	39.3
16	Rotor inertia	gcm²	0.237	0.237	0.237

Specifications

	Thermal data		
17	Thermal resistance housing-ambient		49.2 K/W
18	Thermal resistance winding-housing		13.2 K/W
19	Thermal time constant winding		1.1 s
20	Thermal time constant motor		73.8 s
21	Ambient temperature		-20...+85°C
22	Max. winding temperature		+100°C
	Mechanical data (preloaded ball bearings)		
23	Max. speed		25000 rpm
24	Axial play at axial load	< 0.35 N	0 mm
		> 0.35 N	0.1 mm
25	Radial play		preloaded
26	Max. axial load (dynamic)		0.15 N
27	Max. force for press fits (static)		15 N
	(static, shaft supported)		70 N
28	Max. radial load, 4 mm from flange		0.4 N
	Other specifications		
29	Number of pole pairs		4
30	Number of phases		3
31	Weight of motor		3 g

Values listed in the table are nominal.

Connection	with Hall sensors	sensorless
Pin 1	Motor winding 1	Motor winding 1
Pin 2	Motor winding 2	Motor winding 2
Pin 3	Motor winding 3	Motor winding 3
Pin 4	V_{Hall} 2.5...5.5 VDC	Y
Pin 5	GND	
Pin 6	Hall sensor 1	
Pin 7	Hall sensor 2	
Pin 8	Hall sensor 3	

Output signals: CMOS compatible push-pull stage.

Compatible connector:

Type	Part number	Part number
Molex	52745-0897	52207-0460
FCI	SFV8R-2STBE1HLF	SFW4R-2STGE1LF

Pin for design with Hall sensors:
FPC, 8-pol, Pitch 0.5 mm, top contact style

Option: Sleeve bearings in place of ball bearings
[1]Calculation does not include saturation effect
(p. 71/178)

Operating Range

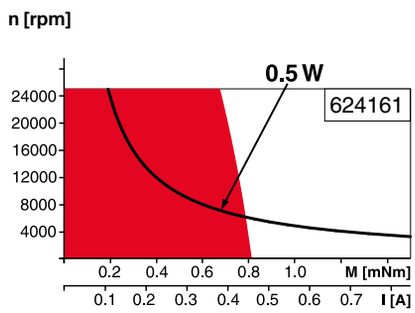

Comments

Continuous operation
In observation of above listed thermal resistance (lines 17 and 18) the maximum permissible winding temperature will be reached during continuous operation at 25°C ambient.
= Thermal limit.

Short term operation
The motor may be briefly overloaded (recurring).

Assigned power rating

maxon Modular System Details on catalog page 46

Planetary Gearhead
∅10 mm
0.005 - 0.1 Nm
Page 370

Planetary Gearhead
∅10 mm
0.01 - 0.15 Nm
Page 371

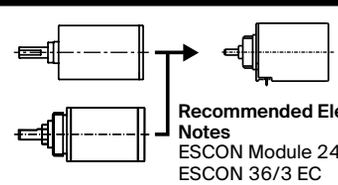

Recommended Electronics:

Notes	Page **46**
ESCON Module 24/2	500
ESCON 36/3 EC	501
ESCON Mod. 50/4 EC-S	501
DEC Module 24/2	505
EPOS4 Mod./Comp. 24/1.5	510