EC-i 30 ∅30 mm, brushless, 30 watt

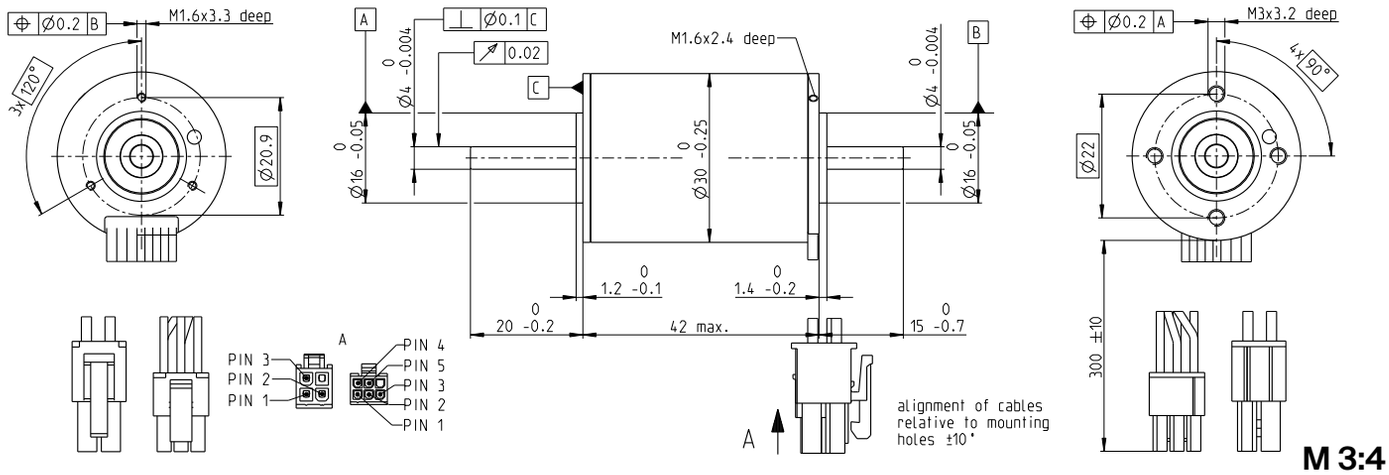

Stock program
Standard program
Special program (on request)

Part Numbers

	with Hall sensors	539472	539473	539474	539475
Motor Data (provisional)					
Values at nominal voltage					
1 Nominal voltage	V	12	24	36	48
2 No load speed	rpm	9190	9190	9190	9010
3 No load current	mA	206	103	68.6	50.1
4 Nominal speed	rpm	7710	7770	7760	7600
5 Nominal torque (max. continuous torque)	mNm	37.3	37.3	35.9	37.4
6 Nominal current (max. continuous current)	A	3.05	1.52	0.982	0.748
7 Stall torque[1]	mNm	341	360	338	358
8 Stall current	A	27.7	14.6	9.15	7.11
9 Max. efficiency	%	83.7	84.1	83.6	84.1
Characteristics					
10 Terminal resistance phase to phase	Ω	0.434	1.64	3.93	6.76
11 Terminal inductance phase to phase	mH	0.279	1.12	2.51	4.66
12 Torque constant	mNm/A	12.3	24.6	37	50.3
13 Speed constant	rpm/V	775	387	258	190
14 Speed/torque gradient	rpm/mNm	27.3	25.8	27.5	25.5
15 Mechanical time constant	ms	2.08	1.98	2.1	1.95
16 Rotor inertia	gcm^2	7.3	7.3	7.3	7.3

Specifications

Thermal data

17 Thermal resistance housing-ambient		11.1 K/W
18 Thermal resistance winding-housing		3.75 K/W
19 Thermal time constant winding		29.1 s
20 Thermal time constant motor		849 s
21 Ambient temperature		-40...+100°C
22 Max. winding temperature		+125°C

Mechanical data (preloaded ball bearings)

23 Max. speed		15000 rpm
24 Axial play at axial load	< 9.0 N	0 mm
	> 9.0 N	0.14 mm
25 Radial play		preloaded
26 Max. axial load (dynamic)		5 N
27 Max. force for press fits (static)		98 N
(static, shaft supported)		2000 N
28 Max. radial load, 5 mm from flange		25 N

Other specifications

29 Number of pole pairs	2
30 Number of phases	3
31 Weight of motor	153 g

Values listed in the table are nominal.

Connection motor (Cable AWG 20)

red	Motor winding 1	Pin 1
black	Motor winding 2	Pin 2
white	Motor winding 3	Pin 3
	N.C.	Pin 4

Connector	**Article number**
Molex	39-01-2040

Connection sensors (Cable AWG 26)

yellow	Hall sensor 1	Pin 1
brown	Hall sensor 2	Pin 2
grey	Hall sensor 3	Pin 3
blue	GND	Pin 4
green	V_{Hall} 4.5...24 VDC	Pin 5
	N.C.	Pin 6

Connector	**Article number**
Molex	430-25-0600

Wiring diagram for Hall sensors see p. 59

[1]Calculation does not include saturation effect (p. 71/178)

Operating Range

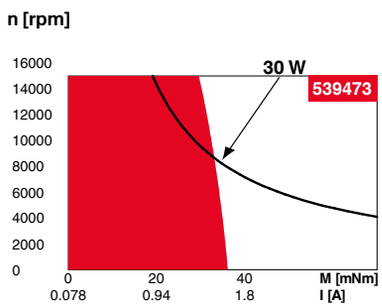

Comments

Continuous operation
In observation of above listed thermal resistance (lines 17 and 18) the maximum permissible winding temperature will be reached during continuous operation at 25°C ambient.
= Thermal limit.

Short term operation
The motor may be briefly overloaded (recurring).

Assigned power rating

maxon Modular System

Details on catalog page 42

Planetary Gearhead
∅32 mm
1.0 - 6.0 Nm
Page 398

Screw Drive
∅32 mm
Page 426–434

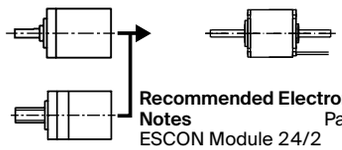

Recommended Electronics:

Notes	Page **42**
ESCON Module 24/2	500
ESCON 36/3 EC	501
ESCON Mod. 50/4 EC-S	501
ESCON Mod. 50/5	501
ESCON 50/5	503
DEC Module 24/2	505
DEC Module 50/5	505
EPOS4 Micro 24/5	509
EPOS4 Mod./Comp. 50/5	510
EPOS4 Comp. 24/5 3-axes	511
EPOS4 50/5	515
EPOS2 P 24/5	520

Encoder 16 EASY/XT
128 - 1024 CPT, 3 channels
Page 465/467

Encoder 16 EASY Absolute/XT
4096 steps
Page 469/471

Encoder 16 RIO
1024 - 32768 CPT, 3 channels
Page 482

Encoder HEDL 5540
500 CPT, 3 channels
Page 485

Encoder AEDL 5810
1024 - 5000 CPT, 3 channels
Page 492